Florida dbpr Department of Business & Professional Regulation

FLA Manufactured Building Program
2601 Blair Stone Road
Tallahassee, Florida 32399-0772
Phone: 850.487.1824 • Fax: 850.414.8436

Halsey Beshears, Secretary

Ron DeSantis, Governor

March 05, 2020

doug oliver

Cook Portable Purvis
100 Douglas St.
Valdosta, GA 31601

RE: Manufacturer Certification, ID MAF-9206; Expiration Date: April 23, 2023

Dear doug oliver

It is my pleasure to inform you that Cook Portable Purvis, located at 132 Central Industrial Row, Purvis, MS 39475, has been approved under the Manufactured Buildings Program, as provided for under Chapter 553, Part I, Florida Statutes, to manufacture Storage Sheds for installation in Florida.

Construction or modification on a manufactured building cannot begin until the Third Party Agency has approved the plans in accordance with the current Florida Building Code. Your Third Party Agency is a contractor for the Department and has statutory authority and responsibilities that must be met to maintain approved status. You may expect and demand quality plans review and inspections.

Each Code change will make your plans obsolete until they have been reviewed, approved and indicated [on the cover page of the plans] for compliance with the Code by your Third Party Agency for plans review. Please ensure that your plans are in compliance and are properly posted on our website. All site-related installation issues are subject to the local authority having jurisdiction.

The Department's contractor will make unannounced monitoring visits at least once each year. You must grant complete access to your manufacturing facility and records to remain in compliance with the rules and regulations of this program.

Your certification is approved for three years from this date. You will receive a renewal notice by Email generated by the BCIS (www.floridabuilding.org) for online renewal. If you have questions you may contact Robert Lorenzo at 850-717-1835 or our FAX at 850-414-8436.

Please visit our website at www.floridabuilding.org to see valuable information on the Florida Manufactured Buildings Program. A copy of this letter must accompany applications for local building permits.

Sincerely,

Robert Lorenzo
Manufactured Buildings Program

cc: Top Line Engineering, LLC

December 23, 2020

Mr. Thomas Campbell
Florida Department of Business and Professional Regulation
2601 Blair Stone Road, Building C
Tallahassee, Florida 32399-6563

RE: Plan Approval
Cook Portables Purvis
Plan # Barn-P

Dear Mr. Campbell,

Pursuant to the requirements of the Department of Business & Professional Regulation, the above referenced documents have been reviewed for compliance with:

2020 Florida Building Code, 7th Edition
2017 National Electrical Code (NFPA-70)
Florida Product Approval Rule 61G20-3.006 (FAC)

All mandatory comments have been satisfied and plans are approved for construction by a currently approved modular building manufacturer.

These documents were reviewed for only what is to be constructed in the factory. Any work performed at the site, such as the foundation, is under the authority and jurisdiction of the local Building Official.

Third Party Agency approval in no way alleviates the builder/manufacturer from complying with all the applicable codes, which may or may not be identified in this review. Approval also does not preclude the local building official from requiring work be performed that was not previously reviewed, approved, and constructed under the State of Florida's Manufactured (Modular) Building Program to make the building, code compliant, for the intended use.

A signed and sealed set of plans are maintained on file with Top Line Engineering, LLC.

If you require my assistance in any way, please do not hesitate to contact me.

Thank you.

Respectfully,

William E. Neary, III
Business Partner
Top Line Engineering, LLC
BILL.TLE@yahoo.com

****** Please note: Any questions regarding local permitting should be directed to the Manufacturer. The Manufacturer's contact information can be found in the title block of the plans.***

COOK PORTABLE PURVIS

132 CENTRAL INDUSTRIAL ROW, PURVIS, MS 39475

STANDARD BARN SHED

STATE OF FLORIDA

Design Criteria	
BUILDING CODE	ASCE 7-16, FBC 2020 (7th ed.)
ELECTRICAL CODE	2017 NEC, NFPA70
BUILDING TYPE	RESIDENTIAL LAWN STORAGE SHED
MANUFACTURER	COOK PORTABLE PURVIS
AGENCY	TOP LINE ENGINEERING, LLC
AGENCY PLAN NUMBER	BARN
CONSTRUCTION TYPE	V-B
FIRE PROTECTION	B
FIRE SUPPRESSION SYSTEM	NO
OCCUPANCY	U - UTILITY
NUMBER OF OCCUPANTS	0
ALLOWABLE # OF STORIES	1
WIND INFORMATION	160 MPH ULTIMATE, V_{ASD} = 124 MPH, EXPOSURE C, CATEGORY I; ENCLOSED; +/- 0.18 INTERNAL PRESSURE COEFFICIENT; 15' HEIGHT
FLOOR LIVE LOAD	75 PSF
FLOOR DEAD LOAD	10.0 PSF
ROOF LIVE LOAD	20.0 PSF
ROOF DEAD LOAD	10.0 PSF
WALL DEAD LOAD	10.0 PSF
UNINHABITED LOFT LIVE LOAD	0.0 PSF
GROUND SNOW LOAD	0.0 PSF
FIRE RATING OF EXTERIOR WALLS	0
"R" RATING OF FLOOR, WALL, AND ROOF	R-0, R-0, R-0
MODULES PER BUILDING	1
SQUARE FOOTAGE	LESS THAN 719 SQ. FT.
EXEMPT FROM ENERGY CONSERVATION CODE?	YES
APPROVED FOR HURRICANE PROTECTION USAGE?	NO
DESIGNED FOR HURRICANE PUBLIC SHELTER?	NO

SITE INSTALLED ITEMS:

NOTE THAT THIS LIST DOES NOT NECESSARILY LIMIT THE ITEMS OF WORK AND MATERIALS THAT MAY BE REQUIRED FOR A COMPLETE INSTALLATION. ALL SITE RELATED ITEMS ARE SUBJECT TO LOCAL JURISDICTION APPROVAL.

1. THE COMPLETE FOUNDATION SUPPORTING AND TIE-DOWN SYSTEM.
2. RAMPS, STAIRS, AND GENERAL ACCESS TO THE BUILDING IF NECESSARY.
3. GUTTERS AND DOWN SPOUTS ON ALL BUILDINGS WITH EAVES OF LESS THAN 6 INCHES HORIZONTAL PROJECTION EXCEPT FOR GABLE END RAKES.

OCCUPANCY NOTE:

THIS BUILDING IS NOT DESIGNED FOR HUMAN HABITATION AND DOES NOT HAVE RUNNING WATER OR SANITATION SERVICES. THIS BUILDING IS DESIGNED AS A UTILITY SHED TO STORE LAWN EQUIPMENT SUCH AS WHEEL BARROWS, GARDENING SUPPLIES, FLOWER POTS, AND CARDBOARD BOXES WITH VARIOUS SMALL ITEMS.

Sheet Index	
SHEET NUMBER	SHEET TITLE
S-1	COVER SHEET
S-2	GENERAL NOTES
S-3	WIND LOAD TABLES
S-4	FASTENING SCHEDULE
S-5	FRAMING PLANS
S-6	ELEVATION PANEL SIDING
S-6A	ELEVATION LAP SIDING
S-7	7'-11 1/2" SHED - FRAMING ELEVATION
S-8	9'-11 1/2" SHED - FRAMING ELEVATION
S-9	11'-0" SHED - FRAMING ELEVATION
S-10	SIDE WALL ELEVATION AND SECTIONS
S-11	CROSS SECTIONS
S-12	DETAILS
S-13	DETAILS
S-14	DETAILS

NOT APPROVED FOR HVHZ

****** Please note: Any questions regarding local permitting should be directed to the Manufacturer. The Manufacturer's contact information can be found in the title block of the plans.***

TOP LINE ENGINEERING, LLC
STRUCTURAL ENGINEERS
William E. Neary, III
SMP-51, SMI-79, ICC 5185040
10649 Oakview Pointe Terrace
Gotha, Florida 34734

KENT M. BICE
LICENSE
No 50421
STATE OF FLORIDA
PROFESSIONAL ENGINEER

12/30/20

1552 6TH ST., WINTER HAVEN, FL 33880
(863)865-6502

THESE PLANS WERE DESIGNED IN ACCORDANCE WITH THE 2020 FLORIDA BUILDING CODE (7TH ED.).

COVER SHEET

DATE: 12/08/20	DRAWN BY: RD
SCALE: AS NOTED	CHECKED BY: KMB

SHEET:
S-1
SHEET 1 OF 15

GENERAL NOTES:

1. WRITTEN DIMENSIONS SHALL TAKE PRECEDENCE OVER SCALED DIMENSIONS.
2. THE FOUNDATION PLAN IS A SEPARATE SET OF PLANS FOR APPROVAL BY LOCAL MUNICIPALITIES.
3. EXTERIOR DIMENSIONS CAN VARY BETWEEN LIMITS SHOWN AT 2' O.C. BUT MEMBER SPACING SHALL NOT EXCEED LIMITS AS INDICATED.
4. ALL THE FOLLOWING LUMBER SHALL BE PRESSURE TREATED IN ACCORDANCE WITH AWPA USE CATEGORY UC4B (GROUND CONTACT, HEAVY DUTY)-SKIDS.
5. ALL THE FOLLOWING LUMBER SHALL BE PRESSURE TREATED IN ACCORDANCE WITH AWPA USE CATEGORY UC3B (EXTERIOR ABOVE GROUND, UNCOATED OR POOR WATER RUNOFF)-FLOOR JOISTS, PLYWOOD FLOOR DECKING, AND EXTERIOR RATED WOOD STRUCTURAL PANEL SIDING.
6. ALL FASTENERS AND CONNECTORS IN CONTACT WITH PRESSURE TREATED WOOD SHALL BE HOT DIPPED GALVANIZED (G185) OR STAINLESS STEEL.
7. ALL WINDOWS WITHIN 24" OF DOORS, AND ALL GLASS IN DOORS SHALL BE SAFETY, TEMPERED, OR ACRYLIC PLASTIC SHEET.
8. FOR ROOFS WITH ASPHALT SHINGLES AND A SLOPE BETWEEN 2 TO 12 AND 4 TO 12 SHALL HAVE A DOUBLE UNDERLAYMENT APPLICATION AS REQUIRED IN ACCORDANCE WITH SECTION 1507.2.2 OF THE 2020 FBC OR PER SHINGLE MANUFACTURER INSTRUCTIONS.
9. UNDERLAYMENT SHALL CONFORM WITH SECTION 1507.2.3 OF THE 2020 FBC OR PER SHINGLE MANUFACTURER INSTRUCTIONS.
10. ASPHALT SHINGLES SHALL CONFORM WITH SECTION 1507.2.5 OF THE 2020 FBC ATTACHMENT OF ASPHALT SHINGLES SHALL CONFORM WITH 1507.2.7 OF THE 2020 FBC.
11. FASTENERS FOR ASPHALT SHINGLES SHALL CONFORM TO SECTION 1507.2.6 OF THE 2020 FBC.
12. TIE-DOWNS SHALL MEET THE REQUIREMENTS OF ALL APPLICABLE CODES LISTED ON SHEET S-1.
13. THESE PLANS HAVE NOT BEEN DESIGNED FOR HVHZ REQUIREMENTS AS SET FORTH IN THE 2020 FBC OR FOR USE AS A COMMERCIAL BUILDING.
14. THE CONTRACTOR SHALL BE RESPONSIBLE FOR VERIFYING ALL EXISTING CONDITIONS.
15. THE CONTRACTOR SHALL BE RESPONSIBLE FOR DELIVERY AND PLACEMENT OF LAWN STORAGE UNIT TO ENSURE THE INTEGRITY OF THE BUILDING AND ITS COMPONENT PARTS.
16. NO FIELD REVISIONS TO ANY STRUCTURAL COMPONENTS OR DEVIATIONS FROM THESE DRAWINGS SHALL BE MADE.
17. THE OWNER AND THE CONTRACTOR SHALL HOLD HARMLESS THE ENGINEER FROM AND AGAINST ALL LIABILITY CLAIMS, DAMAGES, LOSSES AND EXPENSES INCLUDING LEGAL FEES ARISING OUT OF OR RESULTING FROM ERRORS OR OMISSIONS IN THE PERFORMANCE OF THE WORK BY THE CONTRACTOR.
18. SECTIONS AND DETAILS ON THE DRAWINGS ARE INTENDED TO BE TYPICAL AND SHALL APPLY AT ALL SIMILAR LOCATIONS, UNLESS OTHER SECTIONS AND DETAILS ARE SPECIFICALLY REFERENCED.
19. REFER TO SUPPLIED FASTENING SCHEDULE FOR FASTENING BASED ON CONNECTION AND LOCATION OF MEMBERS AS PER 2020 FBC TABLE 2304.10.1 UNLESS NOTED OTHERWISE.
20. BUILDINGS HAVE BEEN DESIGNED FOR LP SMARTSIDE STRAND SUBSTRATE PANEL SIDING, LP SMARTSIDE PRECISION LAP SIDING SHALL BE USED WITH X-STRAPS OR STRUCTURAL
21. SHEATHING AS DETAILED IN THIS PLAN SET.
22. FASTENERS IN LP SMARTSIDE STRAND SUBSTRATE PANEL SIDING MUST NOT BE INSTALLED IN PANEL SIDING GROOVES IN THE FIELD OF THE PANEL SIDING OR WHEN THE PANEL F SIDING GROOVES OCCUR AT CUT EDGES OF THE PANEL SIDING.
23. REFER TO THE ICC-ES EVALUATION REPORT ESR-1301 / 3090 FOR ADDITIONAL DATA AND SPECIFICATIONS OF LP SMARTSIDE STRAND SUBSTRATE PANEL / LAP SIDING.
24. MAX OPENINGS WIDTHS MUST COMPLY WITH DESIGN RATIOS AS PER ANSI/AF&PA SDPWS-2015. BUILDINGS HAVE BEEN DESIGNED TO HAVE ONLY OPENINGS WITH MAX WIDTHS EQUAL TO THOSE IN THE ENDWALL SHEAR WALL CHART.
25. AS PER FBC SECTION 1626.1 EXCEPTION (F): STORAGE SHEDS THAT ARE NOT DESIGNED FOR HUMAN HABITATION AND THAT HAVE A FLOOR AREA OF LESS THAN 720 SQUARE FEET OR LESS ARE NOT REQUIRED TO COMPLY WITH THE MANDATORY WINDBORNE DEBRIS IMPACT STANDARDS OF THIS CODE.
26. IN ACCORDANCE WITH FBC 1609.1.2, “STORAGE SHEDS THAT ARE NOT DESIGNED FOR HUMAN HABITATION AND THAT HAVE A FLOOR AREA OF 720 SQUARE FEET OR LESS ARE NOT REQUIRED TO COMPLY WITH THE MANDATORY WINDBORNE DEBRIS IMPACT STANDARDS OF THIS CODE”.
27. BUILDINGS HAVE BEEN DESIGNED TO HAVE ANCHORS DIRECTLY ATTACHED TO ALL FOUR CORNERS OF THE BUILDING TO RESIST TENSION FORCES FROM LATERAL WIND LOADS. THIS DESIGN CONSIDERATION MUST BE MADE BY INSTALLER WHEN ATTACHING ANCHORING SYSTEM TO BUILDING.
28. UNLESS NOTED OTHERWISE, ATTACH ALL MANUFACTURED PRODUCTS IN ACCORDANCE WITH MANUFACTURERS SPECIFICATIONS.
29. 2X4 SP #2 PRESSURE TREATED LUMBER SHALL BE SUBSTITUTED FOR 2X4 SPF #2 LUMBER IN WALLS FOR USE IN FLOOD PLAINS.
30. PER APA PRODUCT REPORT PR-N124, LP SMARTSIDE STRAND SUBSTRATE SERIES TREATED-ENGINEERED-WOOD PANEL AND LAP SIDING IS PERMITTED ON WALLS FOR USE IN FLOOD PLAINS.
31. 19/32" LP PROSTRUCT FLOORING WITH SMARTFINISH IS PERMITTED IN LIEU OF 5/8" APA RATED STRUCTURAL SHEATHING ON FLOOR. INSTALL PER MANUFACTURER INSTRUCTIONS.
32. FOUNDATION PLANS ARE NOT PART OF THIS PLAN SET AND ARE GOVERNED BY LOCAL JURISDICTION.
33. THIS BUILDING IS EXEMPT FROM THE FECC PER SECTIONS R101.4.2.4, R402.1.
34. BUILDINGS ARE APPROVED FOR RESIDENTIAL LAWN STORAGE ONLY
35. REFER TO TIE DOWN DETAILS FOR PROPER INSTALLATION REQUIREMENTS TO MEET CODE.
36. ALL LUMBER FOR CONSTRUCTION WILL BE #2 SYP EXCEPT AS NOTED.
37. GUTTERS SHALL BE SITE INSTALLED PER THE LOCAL AUTHORITY HAVING JURISDICTION AND PERMITTING REQUIREMENTS.
38. ALL WINDOWS AND DOORS TO MEET THE MINIMUM SPECIFICATIONS PER THE APPROVED PLANS AND THE FLORIDA BUILDING CODE.
39. IN ACCORDANCE WITH FBC 1010.1.1, EXCEPTION (10.) BUILDINGS THAT ARE 400 SQ-FT OR LESS AND THAT ARE INTENDED FOR USE IN CONJUNCTION WITH ONE- AND TWO-FAMILY RESIDENCES ARE NOT SUBJECT TO THE DOOR HEIGHT AND WIDTH REQUIREMENTS OF THIS CODE. STRUCTURES 400 SQ-FT OR MORE SHALL HAVE AN 80” MINIMUM DOOR.
40. IN ACCORDANCE WITH FLORIDA STATUTE 553.80 (1)D, LAWN STORAGE BUILDINGS AND STORAGE SHEDS BEARING THE INSIGNIA OF APPROVAL OF THE DEPARTMENT ARE NOT SUBJECT TO 553.842 (FLORIDA PRODUCT APPROVALS) BUT SHALL MEET THE DESIGN WIND LOAD REQUIREMENTS OF THE 2020 FBC 7TH EDITION.
41. FLAT METAL STRAPS CAN BE BENT AROUND STRUCTURAL MEMBERS OF WALL STUDS, TRUSSES, CHORDS, ETC. TO HELP SECURE THESE MEMBERS, PROVIDED THAT THE ADDED BEND DOES NOT INTERFERE WITH ANY OF THE EXISTING BREAKS/BENDS IN THE STRAP.
42. COMPONENTS/CLADDING ARE IN COMPLIANCE WITH THE 2020 FBC 7TH EDITION.
43. SHEDS LOCATED IN FLOOD HAZARD AREAS MUST COMPLY WITH THE LOCAL FLOOD ZONE REGULATIONS.
44. IF A WALL IS FRAMED FOR FUTURE HVAC UNITS THAT SHALL BE APPROVED BY THE AHJ AND SHALL COMPLY WITH LOCAL REQUIREMENTS FOR PERMITTING.
45. WINDOWS AND DOORS INSTALLED BY THE CUSTOMER THAT SHALL BE APPROVED BY THE AHJ AND SHALL COMPLY WITH LOCAL REQUIREMENTS FOR PERMITTING.
46. HVHZ COMPONENTS FOR SHEDS REQUIRE THAT INSTALLATION PER MANUFACTURER'S INSTRUCTIONS.

NOT APPROVED FOR HVHZ

TOP LINE ENGINEERING, LLC
STRUCTURAL ENGINEERS
William E. Neary, III
SMP-51, SMI-79, ICC 5185040
10649 Oakview Pointe Terrace
Gotha, Florida 34734

KENT M. BICE
LICENSE
No 50421
STATE OF FLORIDA
PROFESSIONAL ENGINEER

12/30/20

THESE PLANS WERE DESIGNED IN ACCORDANCE WITH THE 2020 FLORIDA BUILDING CODE (7TH ED.).

1552 6TH ST., WINTER HAVEN, FL 33880
(863)865-6502

GENERAL NOTES		SHEET:
DATE: 12/08/20	DRAWN BY: RD	S-2
SCALE: AS NOTED	CHECKED BY: KMB	SHEET 2 OF 15

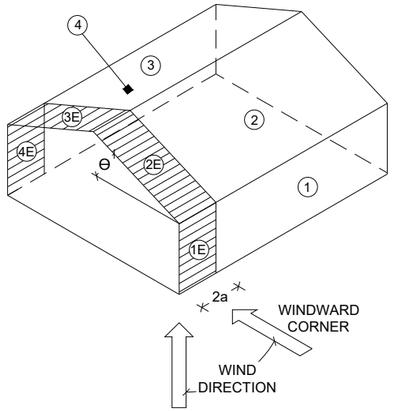

CASE A

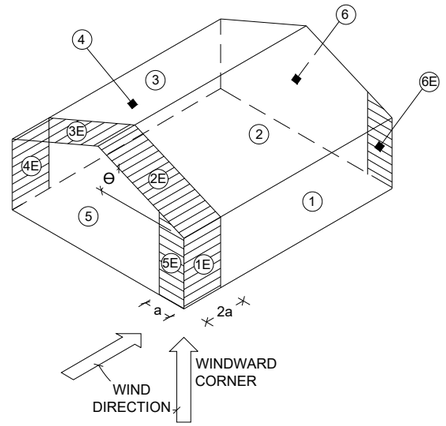

CASE B

WIND LOAD MAIN WIND FORCE PRESSURE DIAGRAMS

BUILDING DATA ASCE 7-16 WIND

WIND VELOCITY V_{ULT}	160 MPH	INTERNAL PRESSURE COEFFICIENT	± 0.18
WIND VELOCITY V_{ASD}	124	(ENCLOSED BUILDING ASCE **7-16**)	
BUILDING CATEGORY	I	HEIGHT & EXPOSURE ADJUSTMENT COEFFICIENT	1.21
		ROOF DEAD LOAD RESISTING UPLIFT (PSF)	10.0
ROOF ANGLE, ° (DEGREES)	60 DEGREES 38 DEGREES ON AVERAGE		
		MEAN ROOF HEIGHT	15
WIND EXPOSURE CATEGORY	C		

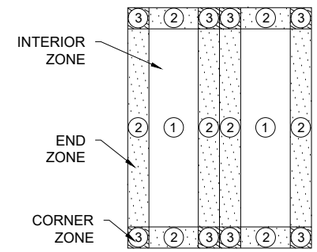

WIND LOAD COMPONENT AND CLADDING ROOF PRESSURE DIAGRAM

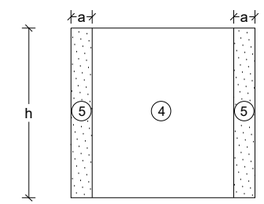

C&C WALL ELEVATION DIAGRAM

NOTES:

1. FOR EFFECTIVE AREAS BETWEEN THOSE GIVEN ABOVE THE LOAD MAY BE INTERPOLATED, OTHERWISE USE THE LOAD ASSOCIATED WITH THE LOWER EFFECTIVE AREA.
2. PLUS AND MINUS SIGNS SIGNIFY PRESSURES ACTING TOWARD AND AWAY FROM THE SURFACES, RESPECTIVELY.
3. PRESSURES SHOWN ARE APPLIED NORMAL TO THE SURFACE.
4. REFER TO PRESSURE ZONE DIAGRAMS PROVIDED FOR CORRESPONDING ZONES.
5. ROOF COVERINGS, FINISHES, ETC SHALL BE DESIGNED FOR THE FULL NEGATIVE DESIGN PRESSURE.

DESIGN WIND LOADS - WINDOWS, DOORS, COMPONENTS AND CLADDING

ROOF			
ZONE	AREA (FT²)	DESIGN PRESSURE (PSF)	
		POSITIVE	NEGATIVE
1	10	30.8	-56.5
1	20	27.4	-47.9
1	50	22.9	-36.5
1	100	19.4	-28.0
2	10	30.8	-56.5
2	20	27.4	-47.9
2	50	22.9	-36.5
2	100	19.4	-28
3	10	30.8	-96.5
3	20	30.8	-76.3
3	50	19.4	-47.5
3	100	19.4	-35.9

WALLS			
ZONE	AREA (FT²)	DESIGN PRESSURE (PSF)	
		POSITIVE	NEGATIVE
4	10	33.7	-36.5
4	20	32.2	-35.0
4	50	29.5	-32.3
4	100	27.1	-29.9
5	10	33.7	-45.1
5	20	32.2	-42.1
5	50	29.5	-39.2
5	100	27.1	-36.3

DESIGN WIND LOADS - MWFRS

	WALL				ROOF			
	SURFACE 1	SURFACE 1E	SURFACE 4	SURFACE 4E	SURFACE 2	SURFACE 2E	SURFACE 3	SURFACE 3E
LOAD CASE A	35.0	41.2	-26.0	-31.3	24.0	27.9	-27.9	-32.8

	SIDE WALL				ROOF				GABLE WALL			
	WINDWARD		LEEWARD		WINDWARD		LEEWARD		WINDWARD		LEEWARD	
	SURFACE 1	SURFACE 1E	SURFACE 4	SURFACE 4E	SURFACE 2	SURFACE 2E	SURFACE 3	SURFACE 3E	SURFACE 5	SURFACE 5E	SURFACE 6	SURFACE 6E
LOAD CASE B	-29.8	-31.3	-29.8	-31.3	-41.2	-59.2	-26.0	-33.6	27.5	37.4	-22.3	-28.9

NOT APPROVED FOR HVHZ

TOP LINE ENGINEERING, LLC
STRUCTURAL ENGINEERS
William E. Neary, III
SMP-51, SMI-79, ICC 5185040
10649 Oakview Pointe Terrace
Gotha, Florida 34734

12/30/20

1552 6TH ST., WINTER HAVEN, FL 33880
(863)865-6502

THESE PLANS WERE DESIGNED IN ACCORDANCE WITH THE 2020 FLORIDA BUILDING CODE (7TH ED.).

WIND LOAD TABLES

DATE: 12/08/20 | DRAWN BY: RD

SCALE: AS NOTED | CHECKED BY: KMB

SHEET: S-3

SHEET 3 OF 15

2020-12-31 TOP LINE ENGINEERING APPROVAL PLAN # Barn-P *** NOT HVHZ APPROVED

FASTENING SCHEDULE

CONNECTION	FASTENING[a, k]	LOCATION
1. JOIST TO SILL OR GIRDER	3 - 8d COMMON (2½" X 0.131") 3 - 3" X 0.131" NAILS 3 - 3", 14 GAGE STAPLES	TOENAIL
2. BRIDGING TO JOIST	2 - 8d COMMON (2½" X 0.131") 2 - 3" X 0.131" NAILS 2 - 3", 14 GAGE STAPLES	TOENAIL EACH END
3. SOLE PLATE TO JOIST OR BLOCKING	16d (3½" X 0.135") AT 12" O.C. 3" X 0.131" NAILS AT 12" O.C. 3", 14 GAGE STAPLES AT 12" O.C.	FACE NAIL
4. SOLE PLATE TO JOIST OR BLOCKING AT BRACED WALL PANEL	3 - 16d (3½" X 0.135") AT 16" O.C. 4 - 3" X 0.131" NAILS AT 16" O.C. 4 - 3", 14 GAGE STAPLES AT 16" O.C.	FACE NAIL
5. TOP PLATE TO STUD	2 - 16d (3½" X 0.162") 3 - 3" X 0.131" NAILS 3 - 3", 14 GAGE STAPLES	END NAIL
6. STUD TO SOLE PLATE	4 - 8d COMMON (2½" X 0.131") 4 - 3" X 0.131" NAILS 4 - 3", 14 GAGE STAPLES	TOENAIL
	2 - 16d COMMON (3½" X 0.162") 3 - 3" X 0.131" NAILS 3 - 3", 14 GAGE STAPLES	END NAIL
7. DOUBLE STUDS	16d (3½" X 0.162") AT 24" O.C. 3" X 0.131" NAILS AT 16" O.C. 3", 14 GAGE STAPLES AT 16" O.C.	FACE NAIL
8. TOP PLATE TO TOP PLATE	16d (3½" X 0.162") AT 16" O.C. 3" X 0.131" NAILS AT 12" O.C. 3", 14 GAGE STAPLES AT 12" O.C.	FACE NAIL
	8 - 16d COMMON (3½" X 0.162") 12 - 3" X 0.131" NAILS 12 - 3", 14 GAGE STAPLES	FACE NAIL AT LAP SPLICE
9. BLOCKING BETWEEN JOISTS OR RAFTERS TO TOP PLATE	3 - 8d COMMON (2½" X 0.131") 3 - 3 X 0.131" NAILS 3 - 3", 14 GAGE STAPLES	TOENAIL
10. RIM JOIST TO TOP PLATE	8d (2½" X 0.131") AT 6" O.C. 3" X 0.131" NAILS AT 6" O.C. 3", 14 GAGE STAPLES AT 6" O.C.	TOENAIL
11. TOP PLATES, LAPS AND INTERSECTIONS	2 - 16d COMMON (3½" X 0.162") 3 - 3" X 0.131" NAILS 3 - 3", 14 GAGE STAPLES	FACE NAIL
12. CONTINUOUS HEADER (2) PIECES	16d COMMON (3½" X 0.162")	16" O.C. EACH EDGE, FACE NAIL
13. CEILING JOISTS TO PLATE	3 - 8d COMMON (2½" X 0.131") 3 - 3" X 0.131" NAILS 3 - 3", 14 GAGE STAPLES	TOENAIL
14. CONTINUOUS HEADER TO STUD	4 - 8d COMMON (2½" X 0.131")	TOENAIL
15. RAFTER TO PLATE	3 - 16d (3½" X 0.162") 4 - 3" X 0.131" NAILS 4 - 3", 14 GAGE STAPLES	TOENAIL
16. 1" DIAGONAL BRACE TO EACH STUD AND PLATE	2 - 8d COMMON (2½" X 0.131") 2 - 3" X 0.131" NAILS 3 - 3", 14 GAGE STAPLES	FACE NAIL
17. BUILT-UP CORNER STUDS	16d (3½" X 0.162") 3" X 0.131" NAILS 3" 14 GAGE STAPLES	12" O.C. FACE NAIL

NOT APPROVED FOR HVHZ

FASTENING SCHEDULE

CONNECTION	FASTENING[a, k]	LOCATION
18. BUILT-UP GIRDER AND BEAMS	20d COMMON (4" X 0.192") at 32" O.C. 3" X 0.131" NAIL AT 24" O.C. 3" 14 GAGE STAPLE AT 24" O.C. AND	FACE NAIL AT TOP AND BOTTOM STAGGERED ON OPPOSITE SIDES
	2 - 20d COMMON (4" X 0.192") OR 3 - 3" X 0.131" NAIL OR 3 - 3" 14 GAGE STAPLE	FACE NAIL AT ENDS AND AT EACH SPLICE
19. COLLAR TIE TO RAFTER	3 - 10d COMMON (3" X 0.148") 4 - 3" X 0.131" NAILS 4 - 3" 14 GAGE STAPLES	FACE NAIL
20. ROOF RAFTER TO 2-BY RIDGE BEAM	3 - 10d COMMON (3½" X 0.148") 4 - 3" X 0.131" NAILS 4 - 3" 14 GAGE STAPLES	TOENAIL
21. JOIST TO BAND JOIST	3 - 16d COMMON (3½" X 0.162") 4 - 3" X 0.131" NAILS 4 - 3" 14 GAGE STAPLES	END NAIL
22. WOOD STRUCTURAL PANELS AND PARTICLEBOARD[b], SUBFLOOR, ROOF AND WALL SHEATHING (TO FRAMING) SINGLE FLOOR, COMBINATION SUBFLOOR-UNDERLAYMENT TO FRAMING	½" AND LESS 6d[c, J] 2⅜" X 0.113" NAIL[l] 1¾" X 16 GAGE[m] STAPLE 19/32" TO ¾" 8d[d] OR 6d[e] 2⅜" X 0.113" NAIL[n] 2" 16 GAGE[n] STAPLE ⅞" TO 1" 8d[c] 1⅛" TO 1¼" 10d[d] OR 8d[e]	6" O.C. AT EDGES AND 12" O.C. AT INTERMEDIATE, 4" O.C. AT COMPONENT AND CLADDING EDGE STRIP # ZONE 3 [REFER TO FIGURE ON SHEET S-3]
23. PANEL SIDING TO FRAMING	½" OR LESS 6d[f] ⅝" 8d[f]	6" / 12" O.C. AT EDGES / INTERMEDIATE
24. FIBERBOARD SHEATHING	1/2" NO. II GAGE ROOFING NAIL[h] 6d COMMON NAIL (2" x 0.113") NO. 16 GAGE STAPLE[i] 25/32" NO. II GAGE ROOFING NAIL[h] 8D COMMON NAIL (2 ½" x 0.131") NO 16 GAGE STAPLE[i]	3" / 6" O.C. AT EDGES / INTERMEDIATE FOR STRUCTURAL APPLICATIONS 6" / 12" O.C. AT EDGES / INTERMEDIATE FOR NON-STRUCTURAL APPLICATIONS

NOTES:

a. COMMON OR BOX NAILS ARE PERMITTED TO BE USED EXCEPT WHERE OTHERWISE STATED.
b. NAILS SPACED AT 6' O.C. AT EDGES, 12" AT INTERMEDIATE SUPPORTS EXCEPT 6" AT SUPPORTS WHERE SPANS ARE 48" OR MORE. NAILS FOR WALL SHEATHING ARE PERMITTED TO BE COMMON, BOX OR CASING.
c. COMMON OR DEFORMED SHANK (6d - 2" x 0.113"; 8d - 2 ½" x 0.131"; 10d 3" x 0.148").
d. COMMON (6d - 2" x 0.113"; 8d - 2 1/2" x 0.131"; 10d x 0.148").
e. DEFORMED SHANK (6d - 2" x 0.113"; 8d - 2 1/2" x 0.131"; 10d 3" x 0.148").
f. CORROSION-RESISTANT SIDING (6d - 1 7/8" x 0.106"; 8d 2 3/8' x 0.128") OR CASING (6d 2" x 0.099"; 8d 2 1/2" x 0.113") NAIL.
g. FASTENERS SPACED 3" O.C. AT EXTERIOR EDGES AND 6" O.C. AT INTERMEDIATE SUPPORTS, WHEN USED AS STRUCTURAL SHEATHING. SPACING SHALL BE 6" O.C. ON THE EDGES AND 12" O.C. AT INTERMEDIATE SUPPORTS FOR NONSTRUCTURAL APPLICATIONS.
h. CORROSION-RESISTANT ROOFING NAILS WITH 7/16" DIAMETER HEAD AND 1 ½"' LENGTH FOR 1/2" SHEATHING AND 1 3/4" LENGTH FOR 25/32" SHEATHING.
i. CORROSION-RESISTANT STAPLES WITH NOMINAL 7/16" CROWN OR 1" CROWN AND 1 1/4" LENGTH FOR 1/2" SHEATHING AND 1 1/2" LENGTH FOR 25/32" SHEATHING. PANEL SUPPORTS AT 16" (20" IF STRENGTH AXIS IS THE LONG DIRECTION OF THE PANEL, UNLESS OTHERWISE MARKED).
j. FOR ROOF SHEATHING APPLICATIONS, 8d NAILS (2 1/2" x 0.113") ARE THE MINIMUM REQUIRED FOR WOOD STRUCTURAL PANELS.
k. STAPLES SHALL HAVE A MINIMUM CROWN WIDTH OF 7/16'.
l. FOR ROOF SHEATHING APPLICATIONS, FASTENERS SPACED 4" O.C. AT EDGES, 8" O.C. AT INTERMEDIATE SUPPORTS.
m. FASTENERS SPACED 4" O.C. AT EDGES, 8" O.C. AT INTERMEDIATE SUPPORTS FOR SUBFLOOR AND WALL SHEATHING AND 3" O.C. AT EDGES, 6" AT INTERMEDIATE SUPPORTS FOR ROOF SHEATHING.
n. FASTENERS SPACED 4" O.C. AT EDGES, 8" AT INTERMEDIATE SUPPORTS.

TOP LINE ENGINEERING, LLC
STRUCTURAL ENGINEERS
William E. Neary, III
SMP-51, SMI-79, ICC 5185040
10649 Oakview Pointe Terrace
Gotha, Florida 34734

KENT M. BICE
LICENSE
No 50421
STATE OF FLORIDA
PROFESSIONAL ENGINEER

12/30/20

THESE PLANS WERE DESIGNED IN ACCORDANCE WITH THE 2020 FLORIDA BUILDING CODE (7TH ED.).

1552 6TH ST., WINTER HAVEN, FL 33880
(863)865-6502

FASTENING SCHEDULE		SHEET:
DATE: 12/08/20	DRAWN BY: RD	S-4
SCALE: AS NOTED	CHECKED BY: KMB	SHEET 4 OF 15

2020-12-31 TOP LINE ENGINEERING APPROVAL PLAN # Barn-P *** NOT HVHZ APPROVED

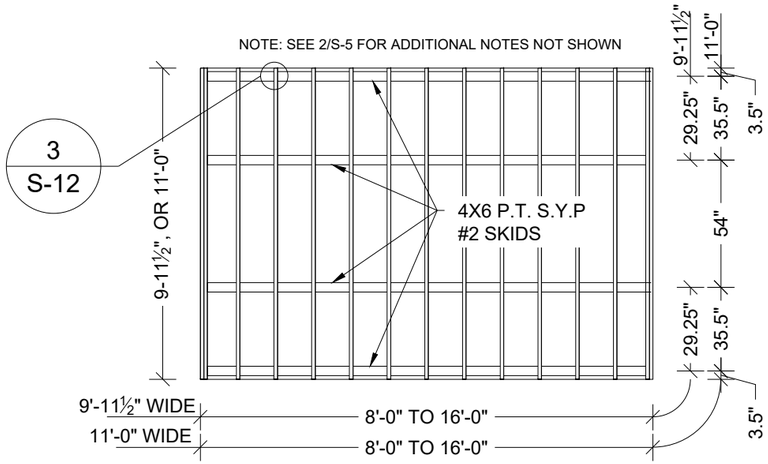

1 S-5 **FLOOR FRAMING PLAN**
SCALE: 3/16" = 1'-0"

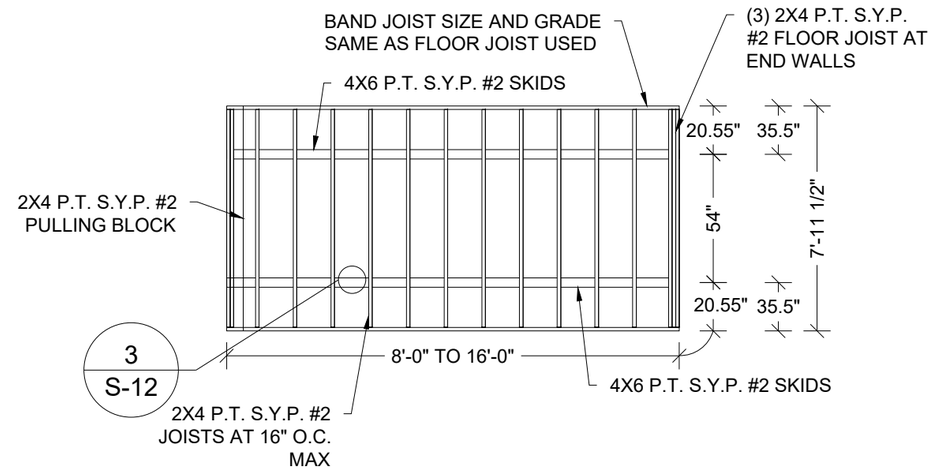

2 S-5 **FLOOR FRAMING PLAN**
SCALE: 3/16" = 1'-0"

SAMPLE DRAWINGS ARE OF A 16' LONG UNIT

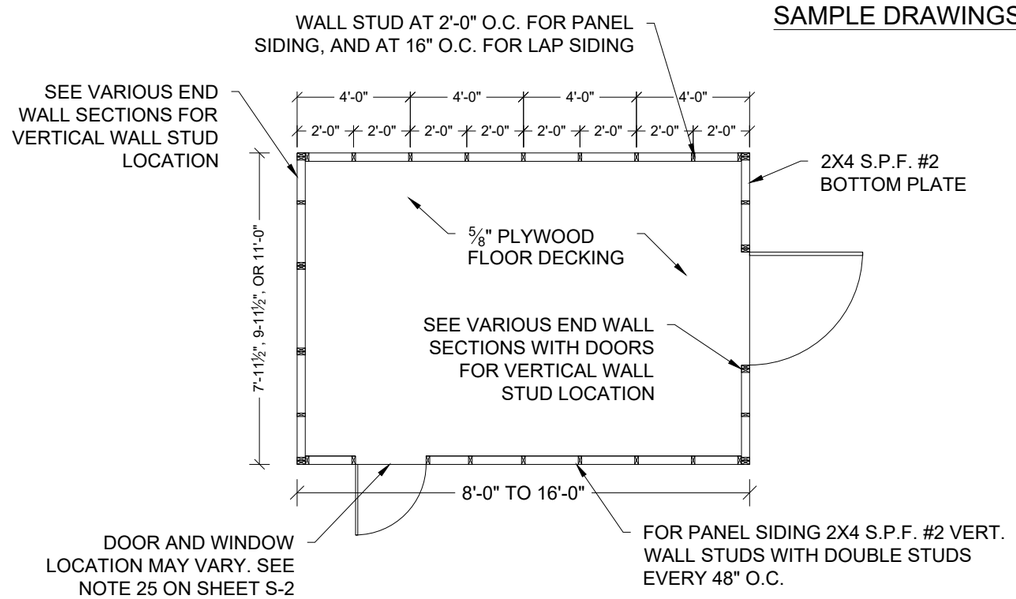

3 S-5 **FLOOR DECK PLAN**
SCALE: 3/16" = 1'-0"

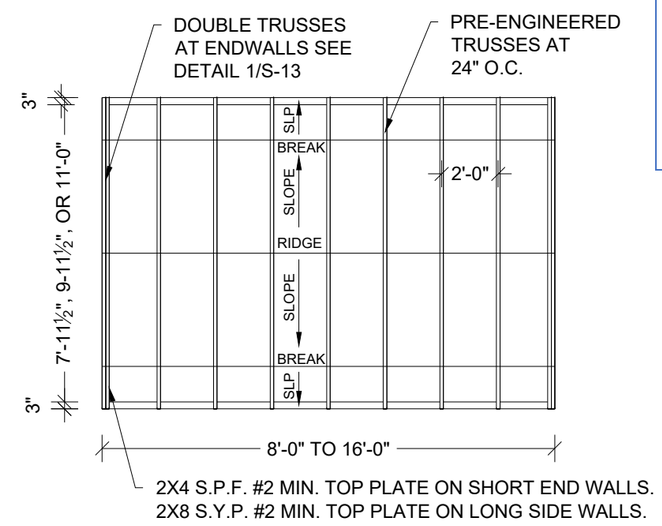

4 S-5 **ROOF FRAMING PLAN**
SCALE: 3/16" = 1'-0"

TOP LINE ENGINEERING, LLC
STRUCTURAL ENGINEERS
William E. Neary, III
SMP-51, SMI-79, ICC 5185040
10649 Oakview Pointe Terrace
Gotha, Florida 34734

12/30/20

THESE PLANS WERE DESIGNED IN ACCORDANCE WITH THE 2020 FLORIDA BUILDING CODE (7TH ED.).

1552 6TH ST., WINTER HAVEN, FL 33880
(863)865-6502

NOT APPROVED FOR HVHZ

FRAMING PLANS		SHEET:
DATE: 12/08/20	DRAWN BY: RD	S-5
SCALE: AS NOTED	CHECKED BY: KMB	SHEET 5 OF 15

2020-12-31 TOP LINE ENGINEERING APPROVAL PLAN # Barn-P *** NOT HVHZ APPROVED

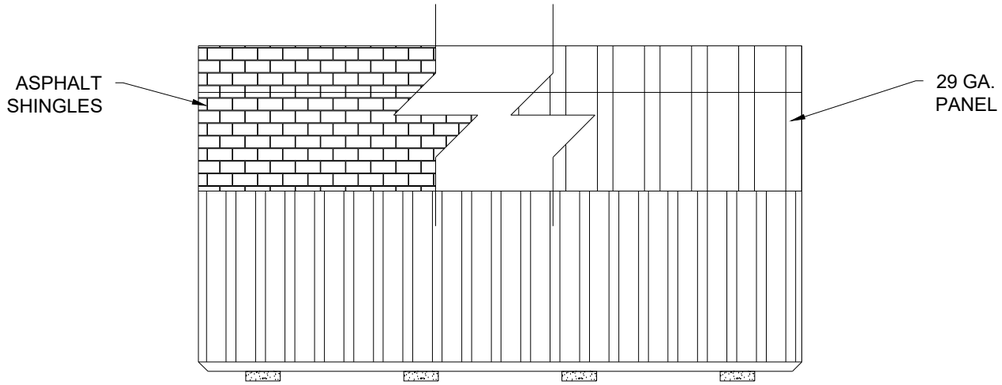

1 / S-6 **SIDE WALL ELEVATION WITH PANEL SIDING**
SCALE: 1/4" = 1'-0"

SHEARWALL WITH 19/32" T1-11[1] OR LP SMARTSIDE STRAND SUBSTRATE PANEL SIDING[2]			
FLOOR WIDTH (FT)	OPENING WIDTH		MAX LENGTH OF BUILDING
	LONG SIDE WALL	SHORT END WALL	
7'-11½"	2'-0", 3'-0"	2'-0", 3'-0", 4'-0"	16'-0"
9'-11½"	2'-0", 3'-0"	2'-0", 3'-0", 4'-0", 6'-0"	
11'-0"	2'-0", 3'-0"	2'-0", 3'-0", 4'-0", 6'-0"	

NOTES:

1. 19/32" T1-11 APA RATED SIDING 303-24" O.C. SHALL BE FASTENED USING 8d COMMON OR DEFORMED (0.131" x 2 1/2") NAILS AT 6" O.C. IN FIELD AND 3" O.C. AT EDGES IN END WALL, AND 6" O.C. EVERYWHERE IN SIDE WALL.
2. 19/32" LP SMARTSIDE STRAND SUBSTRATE PANEL SIDING SHALL BE FASTENED USING 8d COMMON OR DEFORMED (0.131" x 2 1/2") NAILS AT 6" O.C. IN FIELD AND 3" O.C. AT EDGES IN END WALL AND 6" O.C. EVERYWHERE IN SIDE WALL.
3. WINDOWS AND DOORS MAY BE LOCATED IN EITHER THE SIDE WALL OR ENDWALL. DOORS ARE PERMITTED TO BE IN BOTH ENDWALLS OR ENDWALL AND SIDE WALL IF REQUESTED BY CUSTOMER. LIMITATIONS ON THE TOTAL DIMENSIONS SHALL BE BASED ON THE SHEAR WALL HEIGHT TO WIDTH RATIO OF 3.5:1 AND SHALL NOT EXCEED (2/3) OF TOTAL LENGTH OF BUILDING. DOOR AND WINDOW SHALL BE LOCATED SUCH THAT THEY ARE AT LEAST 2'-3" APART.
4. EDGE NAILING SHALL BE PROVIDED AT TOP PLATE IN ALL END WALLS.
5. PROVIDE BLOCKING AT ALL UNSUPPORTED EDGES OF WALL SHEATHING.

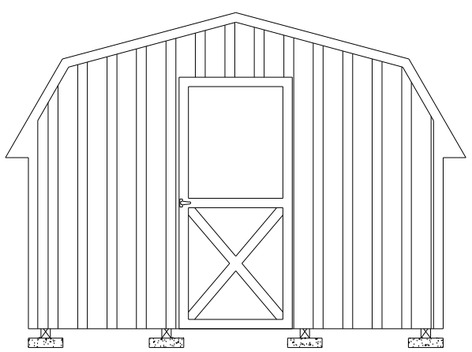

SAMPLE: 11'-0" WIDE UNIT WITH 3'-0" DOOR

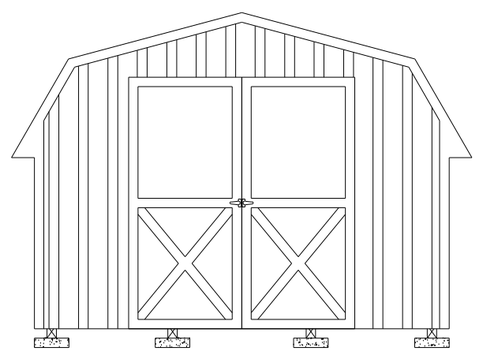

SAMPLE: 11'-0" WIDE UNIT WITH 6'-0" DOOR

2 / S-6 **ENDWALL ELEVATION WITH PANEL SIDING**
SCALE: 1/4" = 1'-0"

TOP LINE ENGINEERING, LLC
STRUCTURAL ENGINEERS
William E. Neary, III
SMP-51, SMI-79, ICC 5185040
10649 Oakview Pointe Terrace
Gotha, Florida 34734

KENT M. BICE
LICENSE
No 50421
STATE OF FLORIDA
PROFESSIONAL ENGINEER

12/30/20

THESE PLANS WERE DESIGNED IN ACCORDANCE WITH THE 2020 FLORIDA BUILDING CODE (7TH ED.).

1552 6TH ST., WINTER HAVEN, FL 33880
(863)865-6502

NOT APPROVED FOR HVHZ

ELEVATIONS AND SHEARWALL		SHEET:
DATE: 12/08/20	DRAWN BY: RD	S-6
SCALE: AS NOTED	CHECKED BY: KMB	SHEET 6 OF 15

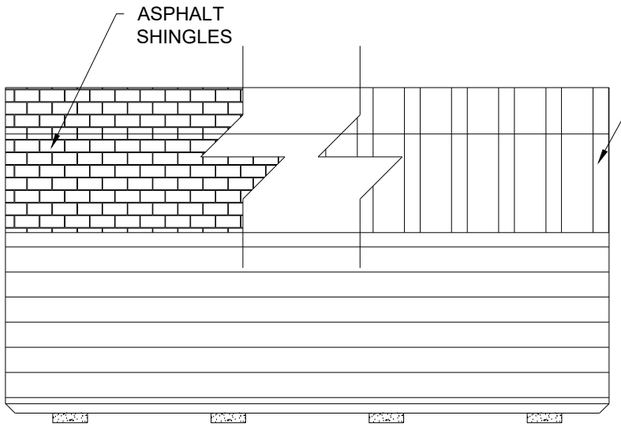

1 / S-6A **SIDE WALL ELEVATION WITH LAP SIDING**
SCALE: 1/4" = 1'-0"

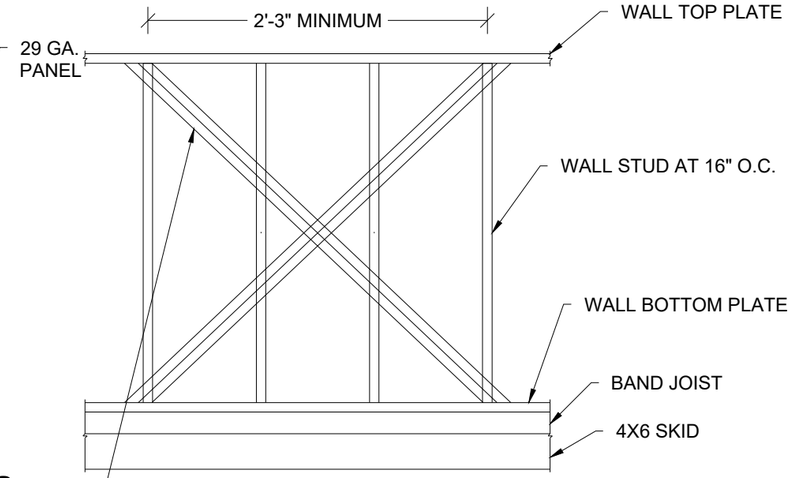

(2) SIMPSON CS20 (33MIL X 1-1/4", GRADE 40 STEEL, G60 COATING) X-STRAP OR EQUIVALENT ON INSIDE FACE OF WALL STUD. ATTACH STRAPS TO WALL TOP & BOTTOM PLATES WITH (5) 0.131" x 2-1/4" NAILS STAGGERED. STRAP MAY BE WRAPPED AROUND WALL TOP & BOTTOM PLATES.
ALTERNATE: 7/16" APA RATED SHEATHING ON OUTSIDE FACE OF WALL STUD FASTENED WITH 8d COMMON OR DEFORMED (0.131" x 2-1/2") NAILS AT 6" O.C. IN FIELD AND 3" O.C. AT EDGES.

2 / S-6A **PARTIAL SIDE WALL FRAMING ELEVATION WITH LAP SIDING**
SCALE: NTS

SHEARWALL WITH LP SMARTSIDE LAP SIDING[1]			
FLOOR WIDTH (FT)	OPENING WIDTH		MAX LENGTH OF BUILDING
	LONG SIDE WALL[2]	SHORT END WALL[3,4]	
7'-11½"	2'-0", 3'-0"	2'-0", 3'-0", 4'-0"	16'-0"
9'-11½"	2'-0", 3'-0"	2'-0", 3'-0", 4'-0", 6'-0"	
11'-0"	2'-0", 3'-0"	2'-0", 3'-0", 4'-0", 6'-0"	

NOTES:
1. MIN. 0.45" THICK LP SMARTSIDE 12" BOLD PROFILES DOUBLE 5" FIBER SUBSTRATE LAP SIDING PER ICC-ES ESR 3090, TABLES 2A, 2B AND 2C
2. ON LONG SIDE WALL, ATTACH LAP SIDING TO EACH WALL STUD WITH MINIMUM 8d SINKER NAILS (0.113" X 2-⅜") AT ⅜" FROM EACH END, AND 3 NAILS PER STUD -- 3" FROM TOP EDGE, IN THE MIDDLE AND 1-½" FROM BOTTOM EDGE. PROVIDE X-STRAP OR SHEATHING ON WALL PER 2/S-6A.
3. ON SHORT END WALL, ATTACH LAP SIDING TO SHEATHING WITH MINIMUM 8d SINKER NAILS (0.113" X 2-⅜") AT ⅜" FROM EACH END, AND 3 NAILS PER 16" SPACING -- 3" FROM TOP EDGE, IN THE MIDDLE AND 1-½" FROM BOTTOM EDGE.
4. ON SHORT END WALL WITHOUT AN OPENING, PROVIDE MIN. 7/16" APA RATED SHEATHING ON EXTERIOR FACE FASTENED TO STUDS WITH 8d COMMON OR DEFORMED (0.131" X 2-½") NAILS AT 6" O.C. IN FIELD AND EDGES. ON SHORT END WALL WITH AN OPENING, PROVIDE MIN. 7/16" APA RATED SHEATHING ON EACH FACE FASTENED TO STUDS WITH 8d COMMON OR DEFORMED (0.131" X 2-½") NAILS AT 6" O.C. IN FIELD AND 2" O.C. AT EDGES.
   ALTERNATE: PROVIDE 19/32" APA RATED SHEATHING ON EXTERIOR FACES FASTENED TO STUDS WITH 8d COMMON OR DEFORMED (0.131" X 2-½") NAILS AT 6" O.C. IN FIELD AND 3" O.C. AT EDGES .
5. ENDWALL. DOORS ARE PERMITTED TO BE IN BOTH ENDWALLS OR ENDWALL AND SIDE WALL IF REQUESTED BY CUSTOMER. LIMITATIONS ON THE TOTAL DIMENSIONS SHALL BE BASED ON THE SHEAR WALL HEIGHT TO WIDTH RATIO OF 3.5:1 AND SHALL NOT EXCEED (2/3) OF TOTAL LENGTH OF BUILDING. DOOR AND WINDOW SHALL BE LOCATED SUCH THAT THEY ARE AT LEAST 2'-3" APART.
6. EDGE NAILING SHALL BE PROVIDED AT TOP PLATE IN ALL END WALLS.
7. PROVIDE BLOCKING AT ALL UNSUPPORTED EDGES OF WALL SHEATHING.

TOP LINE ENGINEERING, LLC
STRUCTURAL ENGINEERS
William E. Neary, III
SMP-51, SMI-79, ICC 5185040
10649 Oakview Pointe Terrace
Gotha, Florida 34734

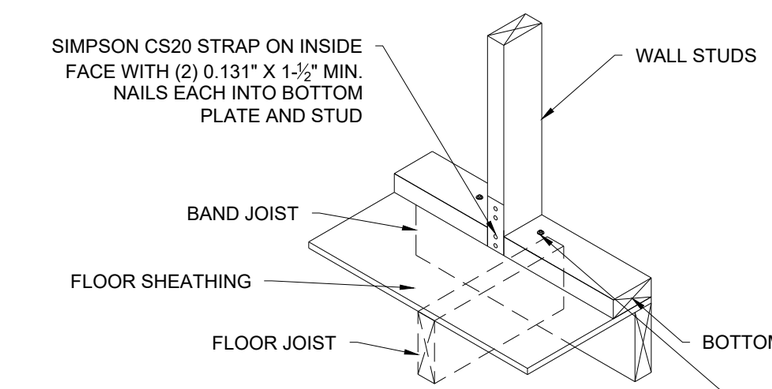

(2) 1/4" x 4" HEX LAG SCREWS WITHIN 3" ON EITHER SIDE OF STUD AT X-BRACE END LOCATIONS AND CENTERED THRU BAND JOIST. PREDRILL MAX. 1/4" DIA. HOLE THRU BOTTOM PLATE AND 0.15" DIA. HOLE THRU SHEATHING AND BAND JOIST.

3 / S-6A **WALL STUD TIEDOWN FOR X-BRACE OPTION**
SCALE: NTS

NOT APPROVED FOR HVHZ

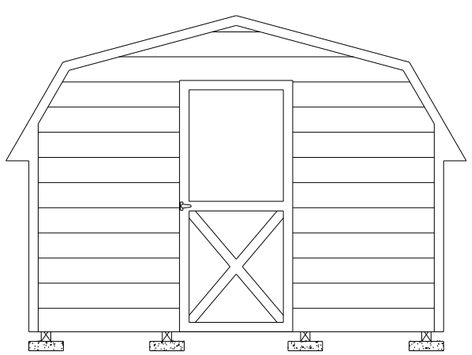

SAMPLE: 11'-0" WIDE UNIT WITH 3'-0" DOOR

4 / S-6A **ENDWALL ELEVATION WITH LAP SIDING**
SCALE: 1/4" = 1'-0"

KENT M. BICE
LICENSE
No 50421
STATE OF FLORIDA
PROFESSIONAL ENGINEER
12/30/20

THESE PLANS WERE DESIGNED IN ACCORDANCE WITH THE 2020 FLORIDA BUILDING CODE (7TH ED.).

1552 6TH ST., WINTER HAVEN, FL 33880
(863)865-6502

ELEVATIONS AND SHEARWALL

DATE: 12/08/20	DRAWN BY: RD
SCALE: AS NOTED	CHECKED BY: KMB

SHEET: S-6A
SHEET 7 OF 15

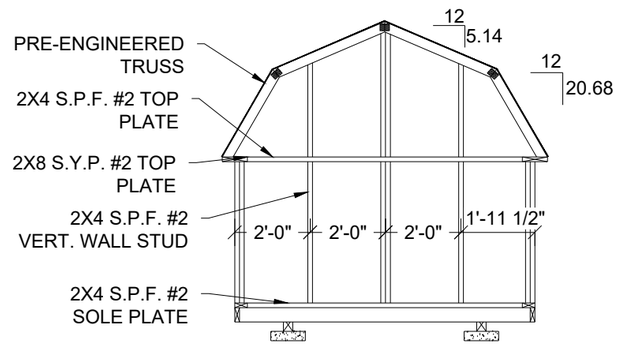

7'-11½" SHED ENDWALL
WITH NO OPENING

1 / S-7 **FRAMING ELEVATION**
SCALE: 1/4" = 1'-0"

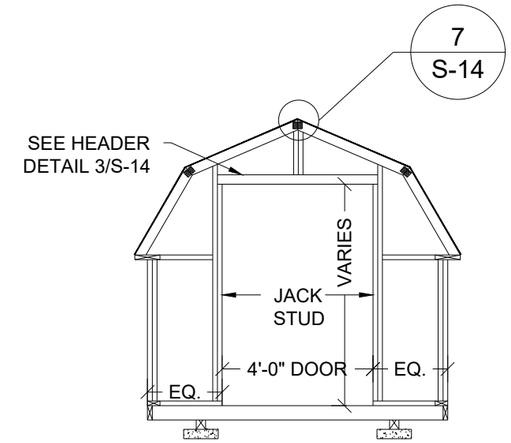

7'-11½" SHED ENDWALL
WITH 4'-0" DOOR OPENING

2 / S-7 **FRAMING ELEVATION**
SCALE: 1/4" = 1'-0"

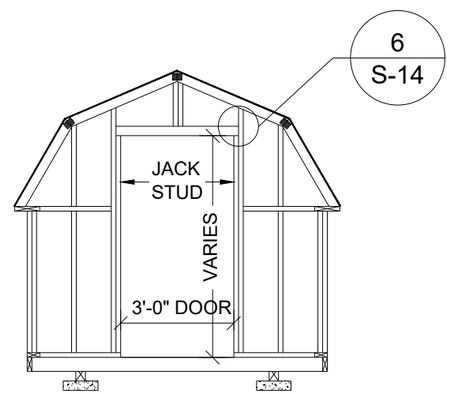

7'-11½" SHED ENDWALL
WITH 3'-0" DOOR OPENING

3 / S-7 **FRAMING ELEVATION**
SCALE: 1/4" = 1'-0"

TOP LINE ENGINEERING, LLC
STRUCTURAL ENGINEERS
William E. Neary, III
SMP-51, SMI-79, ICC 5185040
10649 Oakview Pointe Terrace
Gotha, Florida 34734

12/30/20

THESE PLANS WERE DESIGNED IN ACCORDANCE WITH THE 2020 FLORIDA BUILDING CODE (7TH ED.).

1552 6TH ST., WINTER HAVEN, FL 33880
(863)865-6502

NOT APPROVED FOR HVHZ

7'-11 1/2" SHED
FRAMING ELEVATIONS

DATE: 12/08/20	DRAWN BY: RD
SCALE: AS NOTED	CHECKED BY: KMB

SHEET: S-7
SHEET 8 OF 15

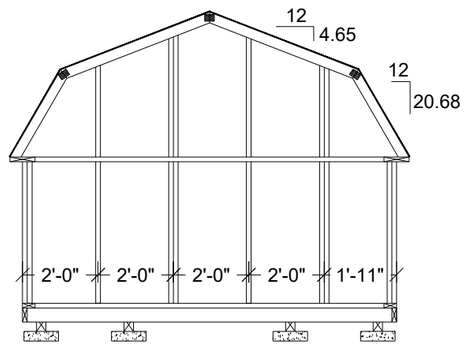

9'-11½" SHED ENDWALL
WITH NO OPENING

1 / S-8 **FRAMING ELEVATION**
SCALE: 1/4" = 1'-0"

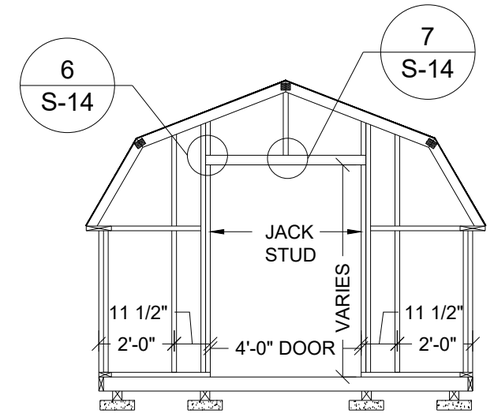

9'-11½" SHED ENDWALL
WITH 4'-0" DOOR OPENING

2 / S-8 **FRAMING ELEVATION**
SCALE: 1/4" = 1'-0"

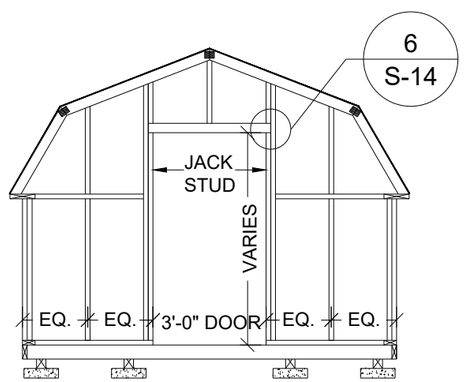

9'-11½" SHED ENDWALL
WITH 3'-0" DOOR OPENING

3 / S-8 **FRAMING ELEVATION**
SCALE: 1/4" = 1'-0"

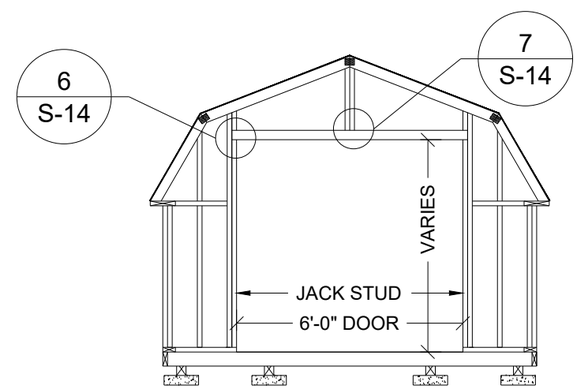

9'-11½" SHED ENDWALL
WITH 6'-0" DOOR OPENING

4 / S-8 **FRAMING ELEVATION**
SCALE: 1/4" = 1'-0"

TOP LINE ENGINEERING, LLC
STRUCTURAL ENGINEERS
William E. Neary, III
SMP-51, SMI-79, ICC 5185040
10649 Oakview Pointe Terrace
Gotha, Florida 34734

12/30/20

THESE PLANS WERE DESIGNED IN ACCORDANCE WITH THE 2020 FLORIDA BUILDING CODE (7TH ED.).

1552 6TH ST., WINTER HAVEN, FL 33880
(863)865-6502

NOT APPROVED FOR HVHZ

9'-11 1/2" SHED
FRAMING ELEVATIONS

DATE: 12/08/20	DRAWN BY: RD
SCALE: AS NOTED	CHECKED BY: KMB

SHEET:
S-8
SHEET 9 OF 15

2020-12-31 TOP LINE ENGINEERING APPROVAL PLAN # Barn-P *** NOT HVHZ APPROVED

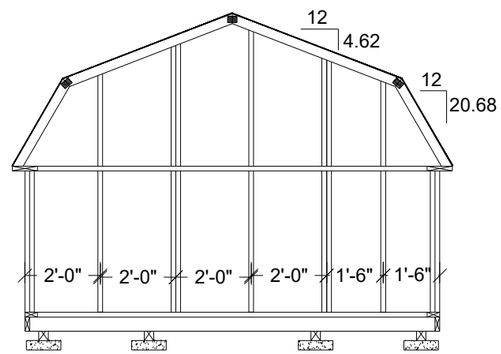

11'-0" SHED ENDWALL WITH
NO OPENING

1 / S-9 **FRAMING ELEVATION**
SCALE: 1/4" = 1'-0"

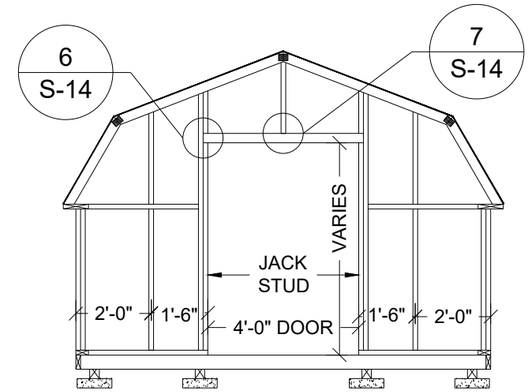

11'-0" SHED ENDWALL WITH
4'-0" DOOR OPENING

2 / S-9 **FRAMING ELEVATION**
SCALE: 1/4" = 1'-0"

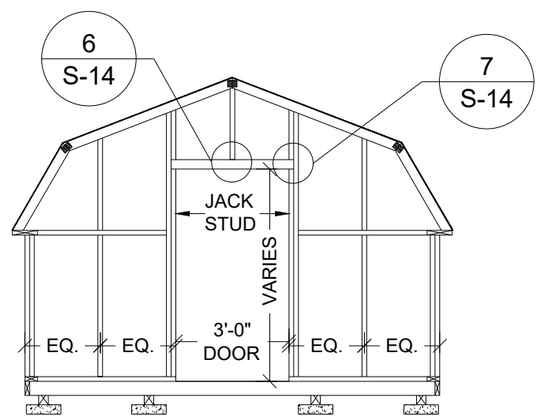

11'-0" SHED ENDWALL WITH
3'-0" DOOR OPENING

3 / S-9 **FRAMING ELEVATION**
SCALE: 1/4" = 1'-0"

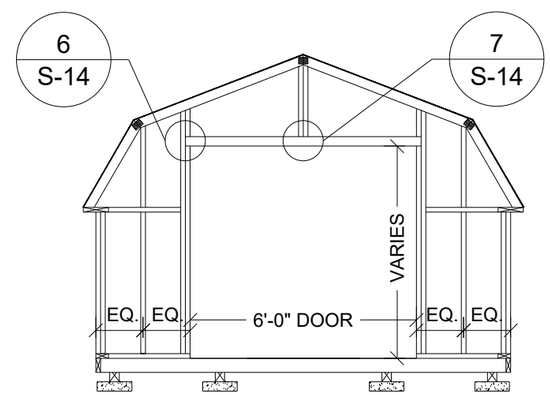

11'-0" SHED ENDWALL WITH
6'-0" DOOR OPENING

4 / S-9 **FRAMING ELEVATION**
SCALE: 1/4" = 1'-0"

TOP LINE ENGINEERING, LLC
STRUCTURAL ENGINEERS
William E. Neary, III
SMP-51, SMI-79, ICC 5185040
10649 Oakview Pointe Terrace
Gotha, Florida 34734

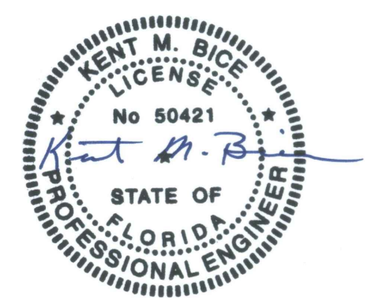

12/30/20

THESE PLANS WERE DESIGNED IN ACCORDANCE WITH THE 2020 FLORIDA BUILDING CODE (7TH ED.).

1552 6TH ST., WINTER HAVEN, FL 33880
(863)865-6502

NOT APPROVED FOR HVHZ

11'-0" SHED FRAMING ELEVATIONS		SHEET:
DATE: 12/08/20	DRAWN BY: RD	S-9
SCALE: AS NOTED	CHECKED BY: KMB	SHEET 10 OF 15

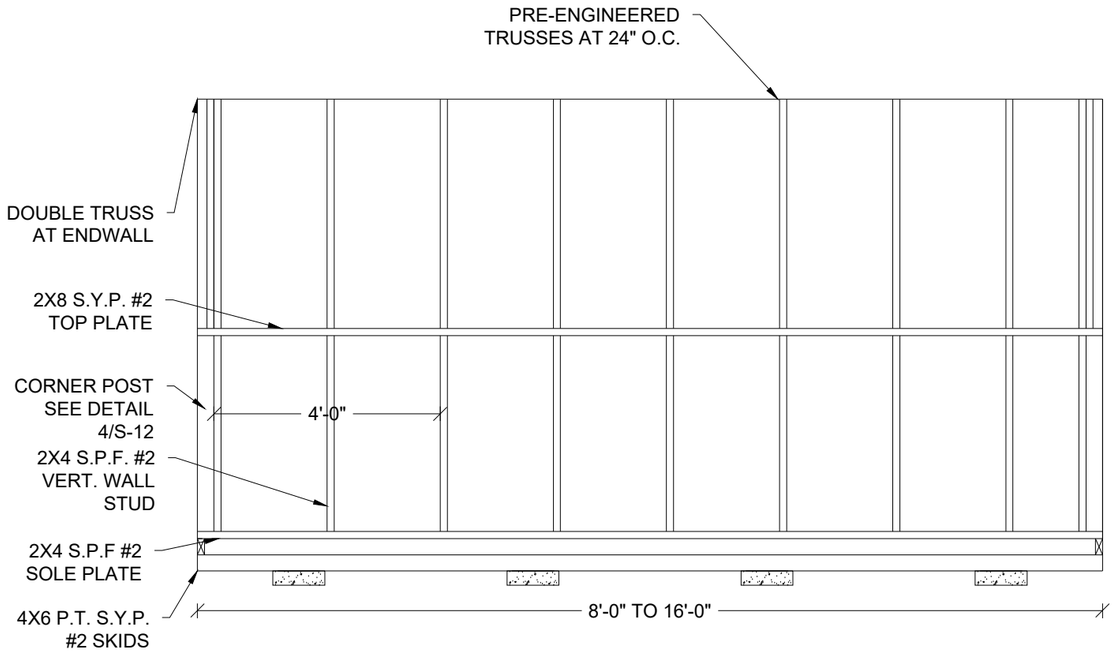

1 / S-10 **FRAMING ELEVATION**
SCALE: 3/8" = 1'-0"

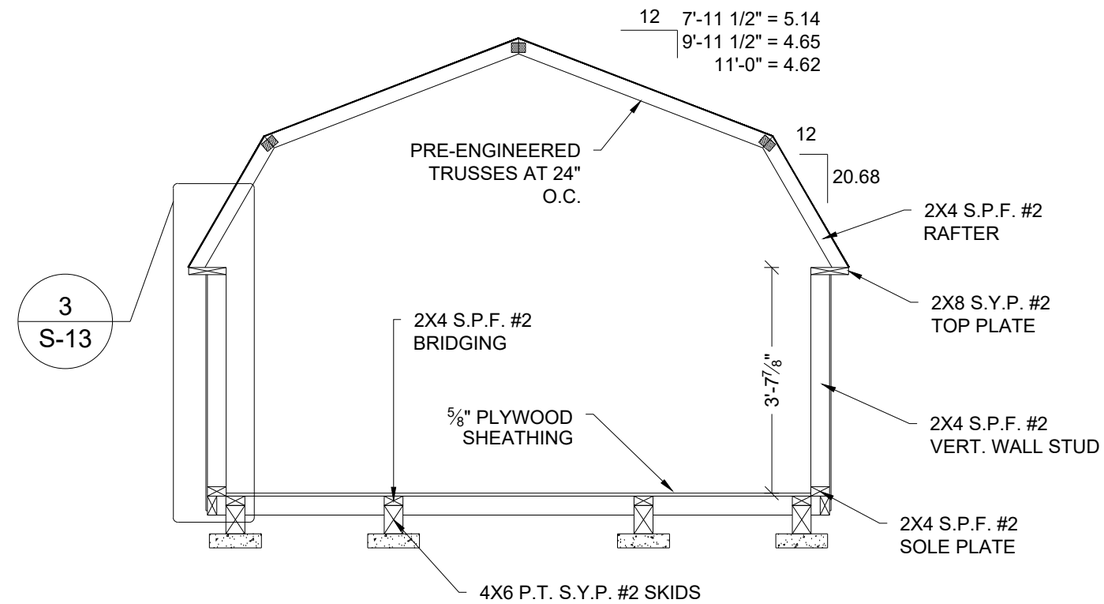

2 / S-10 **CROSS SECTION**
SCALE: 3/8" = 1'-0"

SAMPLE: 11'-0" WIDE UNIT

NOTE:
FOR ALL FASTENING OF FRAMING MEMBERS NOT NOTED ON THIS SHEET REFER TO FASTENING SCHEDULE ON SHEET S-4.

TOP LINE ENGINEERING, LLC
STRUCTURAL ENGINEERS
William E. Neary, III
SMP-51, SMI-79, ICC 5185040
10649 Oakview Pointe Terrace
Gotha, Florida 34734

KENT M. BICE
LICENSE
No 50421
STATE OF
FLORIDA
PROFESSIONAL ENGINEER
12/30/20

THESE PLANS WERE DESIGNED IN ACCORDANCE WITH THE 2020 FLORIDA BUILDING CODE (7TH ED.).

NOT APPROVED FOR HVHZ

1552 6TH ST., WINTER HAVEN, FL 33880
(863)865-6502

SIDE WALL ELEVATION AND SECTIONS		SHEET:
DATE: 12/08/20	DRAWN BY: RD	S-10
SCALE: AS NOTED	CHECKED BY: KMB	SHEET 11 OF 15

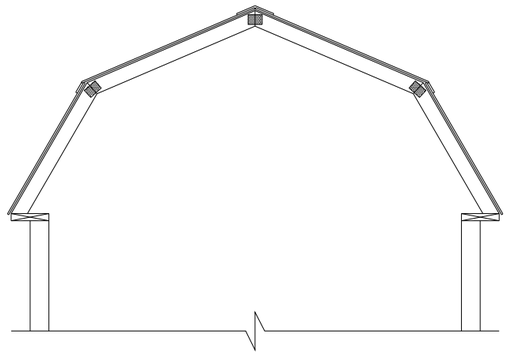

7'-11½" WIDE
OPTIONAL METAL ROOF

1 / S-11 **CROSS SECTION**
SCALE: 3/8" = 1'-0"

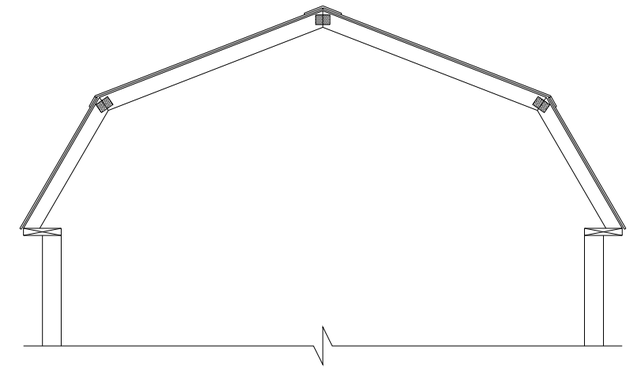

9'-11½" WIDE
OPTIONAL METAL ROOF

2 / S-11 **CROSS SECTION**
SCALE: 3/8" = 1'-0"

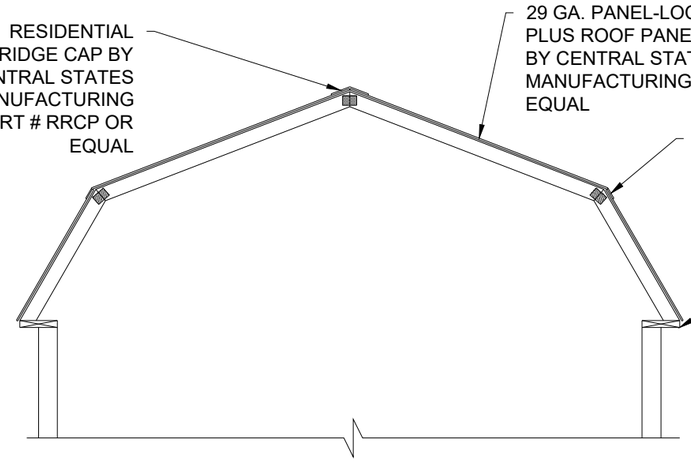

11'-0" WIDE
OPTIONAL METAL ROOF

3 / S-11 **CROSS SECTION**
SCALE: 3/8" = 1'-0"

NOT APPROVED FOR HVHZ

TOP LINE ENGINEERING, LLC
STRUCTURAL ENGINEERS
William E. Neary, III
SMP-51, SMI-79, ICC 5185040
10649 Oakview Pointe Terrace
Gotha, Florida 34734

12/30/20

1552 6TH ST., WINTER HAVEN, FL 33880
(863)865-6502

THESE PLANS WERE DESIGNED IN ACCORDANCE WITH THE 2020 FLORIDA BUILDING CODE (7TH ED.).

CROSS SECTIONS		SHEET:
DATE: 12/08/20	DRAWN BY: RD	S-11
SCALE: AS NOTED	CHECKED BY: KMB	SHEET 12 OF 15

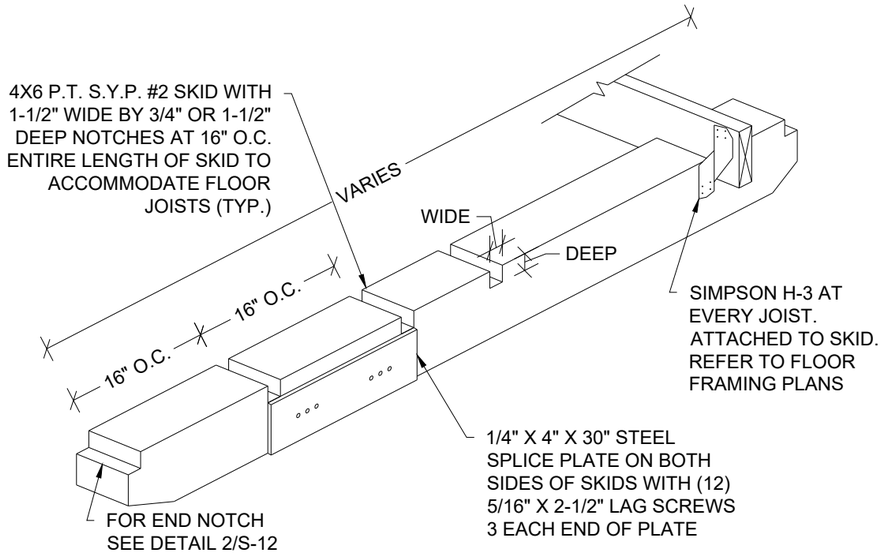

1 / S-12 **ISOMETRIC SKID DETAIL**
SCALE: N.T.S.

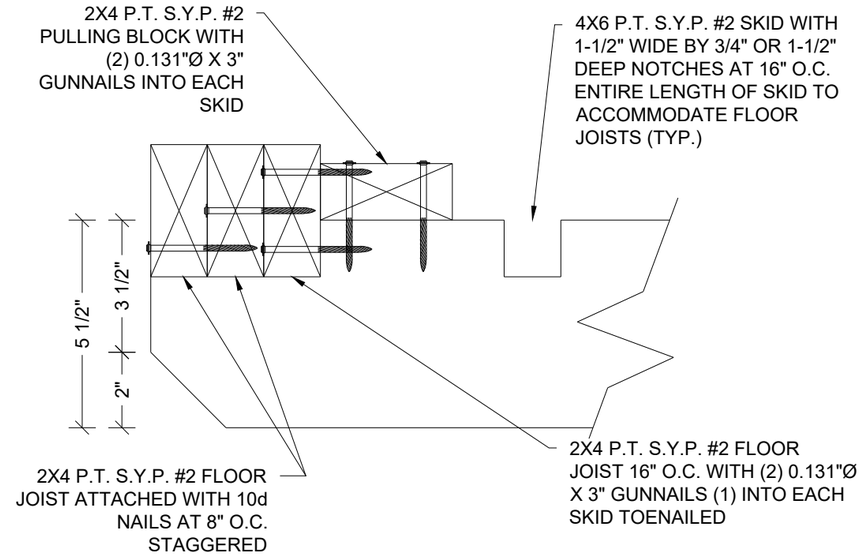

2 / S-12 **END WALL JOIST DETAIL**
SCALE: 3" = 1'-0"

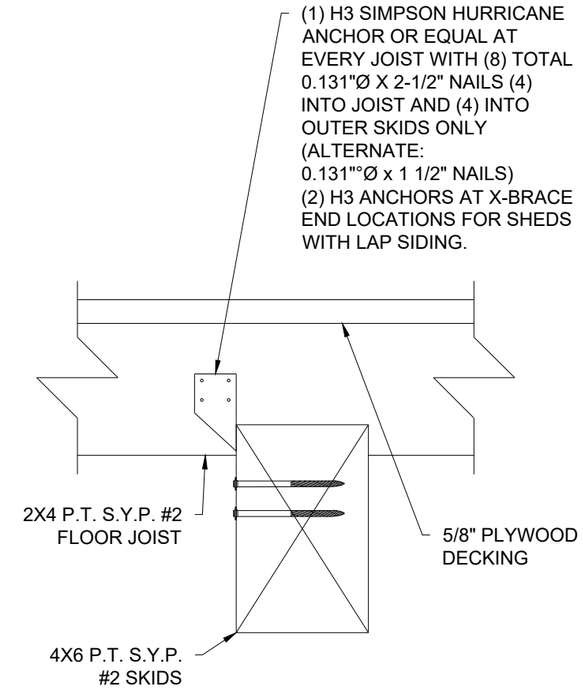

3 / S-12 **SKID CONNECTION DETAIL**
SCALE: 3" = 1'-0"

NOTE:
FOR ALL FASTENERS OF FRAMING MEMBERS NOT NOTED ON THIS SHEET, REFER TO FASTENING SCHEDULE ON SHEET S-4.

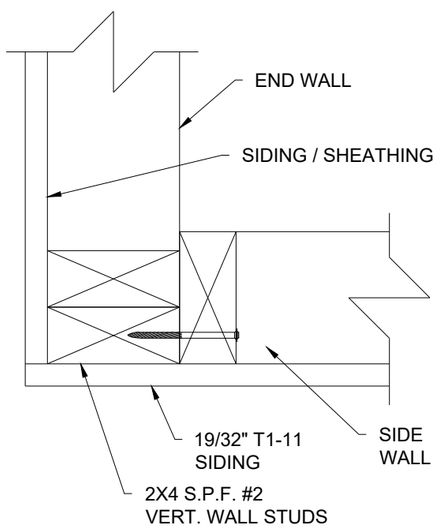

4 / S-12 **CORNER CONNECTION DETAIL**
SCALE 3" = 1'-0"

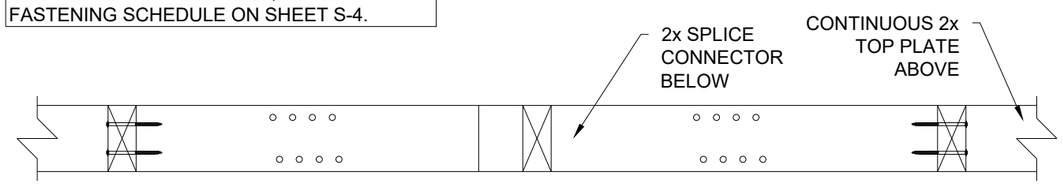

SPLICE CONNECTION DETAIL
PLAN VIEW

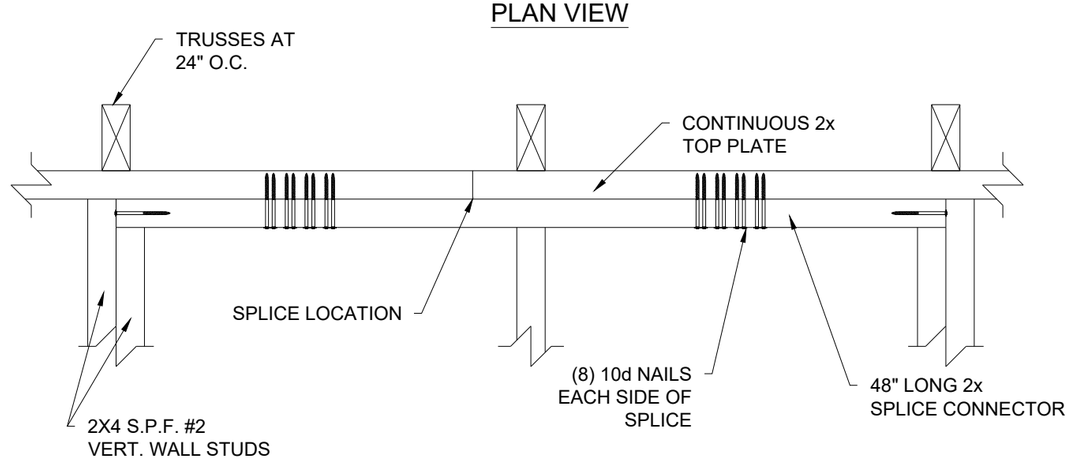

5 / S-12 **SPLICE CONNECTION DETAIL**
SCALE: 1-1/2" = 1'-0"

NOT APPROVED FOR HVHZ

TOP LINE ENGINEERING, LLC
STRUCTURAL ENGINEERS
William E. Neary, III
SMP-51, SMI-79, ICC 5185040
10649 Oakview Pointe Terrace
Gotha, Florida 34734

KENT M. BICE
LICENSE
No 50421
STATE OF FLORIDA
PROFESSIONAL ENGINEER

12/30/20

1552 6TH ST., WINTER HAVEN, FL 33880
(863)865-6502

THESE PLANS WERE DESIGNED IN ACCORDANCE WITH THE 2020 FLORIDA BUILDING CODE (7TH ED.).

DETAILS	
DATE: 12/08/20	DRAWN BY: RD
SCALE: AS NOTED	CHECKED BY: KMB

SHEET: S-12
SHEET 13 OF 15

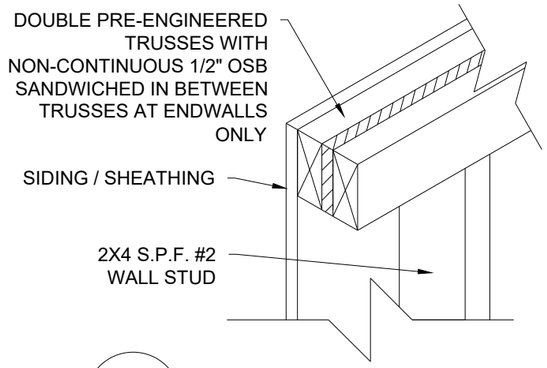

1 / S-13 **DOUBLE TRUSS DETAIL**
SCALE: 1-1/2" = 1'-0"

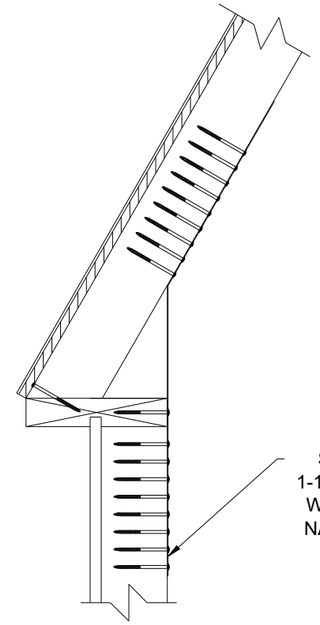

4 / S-13 **ALTERNATE WALL STUD TO RAFTER DETAIL**
SCALE: 1-1/2" = 1'-0"

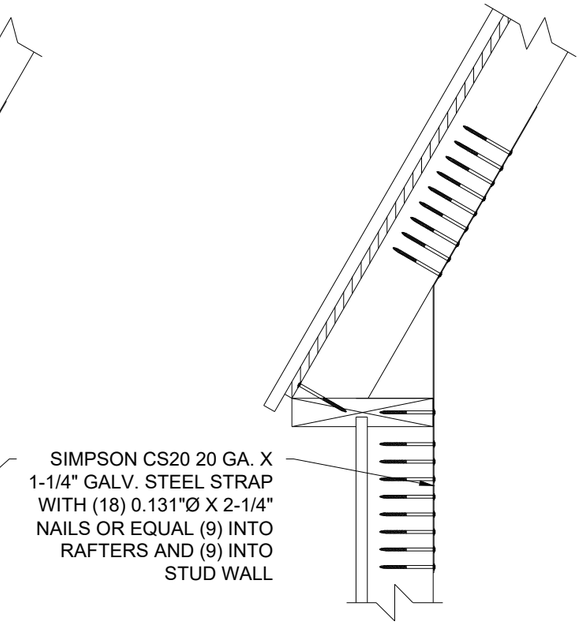

5 / S-13 **ALTERNATE WALL STUD TO RAFTER WITH METAL ROOF DETAIL**
SCALE: 1-1/2" = 1'-0"

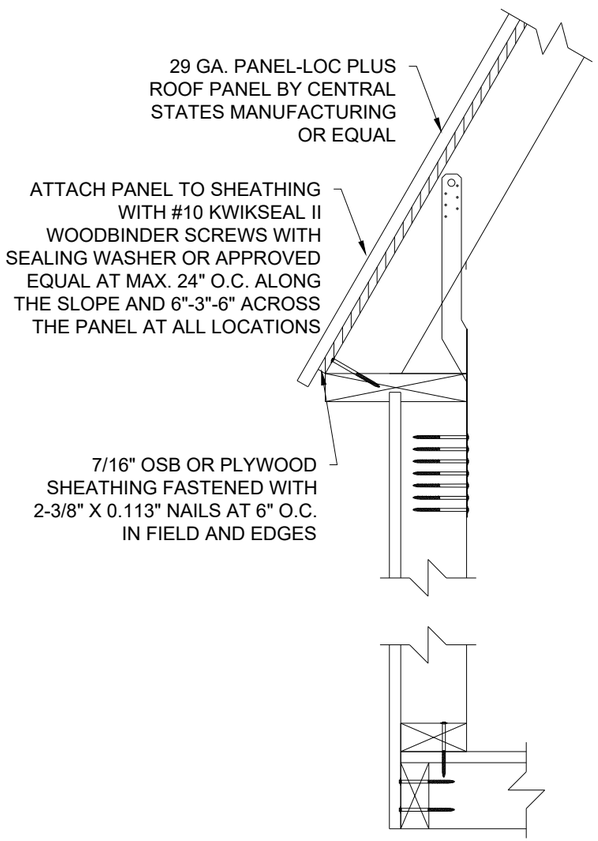

2 / S-13 **WALL STUD TO RAFTER FASTENING WITH METAL ROOF DETAIL**
SCALE: 1-1/2" = 1'-0"

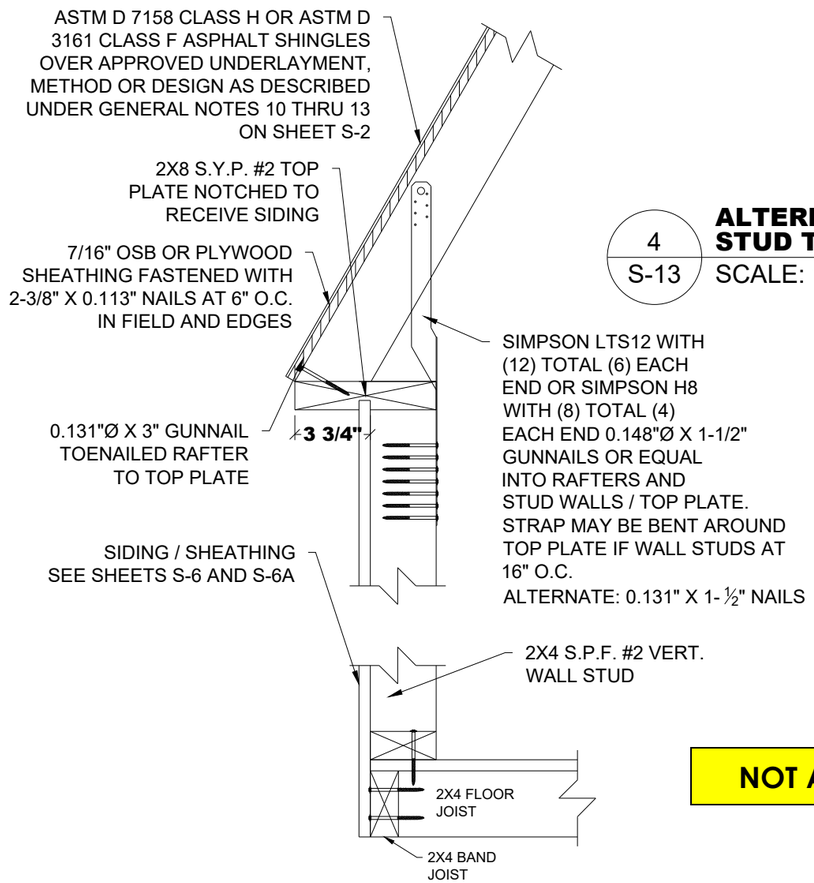

3 / S-13 **WALL STUD TO RAFTER AND FLOOR FASTENING DETAIL**
SCALE: 1-1/2" = 1'-0"

TOP LINE ENGINEERING, LLC
STRUCTURAL ENGINEERS
William E. Neary, III
SMP-51, SMI-79, ICC 5185040
10649 Oakview Pointe Terrace
Gotha, Florida 34734

NOT APPROVED FOR HVHZ

KENT M. BICE LICENSE No 50421 STATE OF FLORIDA PROFESSIONAL ENGINEER
12/30/20

NOTE:
FOR ALL FASTENING OF FRAMING MEMBERS NOT NOTED ON THIS SHEET, REFER TO FASTENING SCHEDULE ON SHEET S-4.

1552 6TH ST., WINTER HAVEN, FL 33880
(863)865-6502

THESE PLANS WERE DESIGNED IN ACCORDANCE WITH THE 2020 FLORIDA BUILDING CODE (7TH ED.).

DETAILS

DATE: 12/08/20	DRAWN BY: RD
SCALE: AS NOTED	CHECKED BY: KMB

SHEET: S-13
SHEET 14 OF 15

18 GA. GALVANIZED STEEL WITH
(12) TOTAL (6) EACH END
0.148"Ø X 1-½" NAILS OR EQUAL INTO
RAFTERS AND STUD WALLS

1 / S-14 **SIMPSON STRAP DETAIL**
SCALE: 3" = 1'-0"

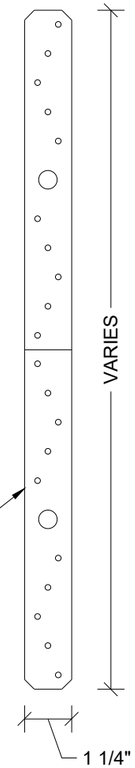

NOTE: USED ON EVERY
WALL STUD TO
CONNECT WALL TO
ROOF TRUSS

SIMPSON CS20 20 GA X 1-¼"
GALV. STEEL STRAP WITH
(18) 0.131"Ø X 2-¼" NAILS
OR EQUAL (9) INTO
RAFTERS AND (9) INTO
STUD WALL

2 / S-14 **STRAP DETAIL**
SCALE: 3" = 1'-0"

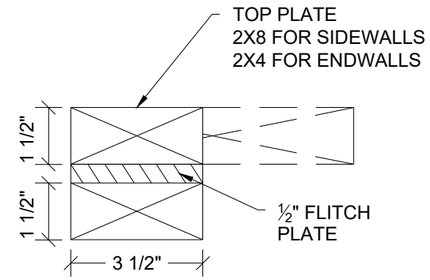

3 / S-14 **HEADER SECTION**
SCALE: 3" = 1'-0"

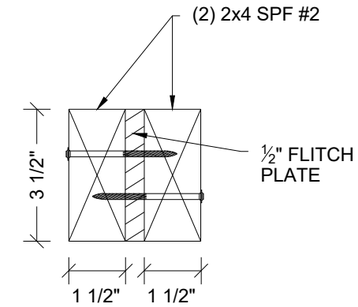

4 / S-14 **HEADER SECTION**
SCALE: 3" = 1'-0"

NOT APPROVED FOR HVHZ

TOP LINE ENGINEERING, LLC
STRUCTURAL ENGINEERS
William E. Neary, III
SMP-51, SMI-79, ICC 5185040
10649 Oakview Pointe Terrace
Gotha, Florida 34734

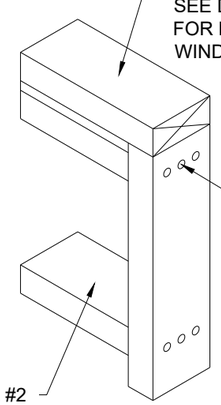

(1) - 2X S.P.F. #2 WITH
1/2" PLYWOOD FILLER
SEE DETAIL ON 3/S-14
FOR MAX 2'-0" WIDE
WINDOW

(3) 0.131"Ø X 3"
GUNNAILS
EACH END OF
HEADER

2X4 S.P.F. #2
LAID FLAT

5 / S-14 **WINDOW HEADER AND SILL DETAIL**
SCALE: N.T.S.

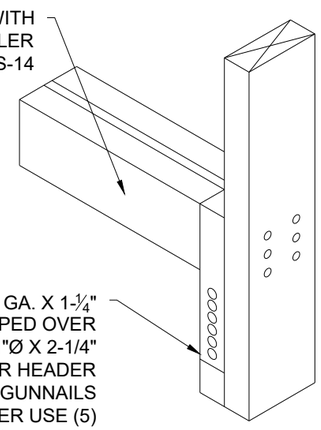

(2) - 2X S.P.F. #2 WITH
1/2" PLYWOOD FILLER
SEE DETAIL ON 4/S-14

SIMPSON CS20 20 GA. X 1-¼"
STRAP WRAPPED OVER
HEADER WITH 0.131"Ø X 2-1/4"
UP TO 4'-0" DOOR HEADER
USE (3) GUNNAILS
6'-0" DOOR HEADER USE (5)
GUNNAILS ON EACH END OF
STRAP

6 / S-14 **HEADER WITH STRAP**
SCALE: N.T.S.

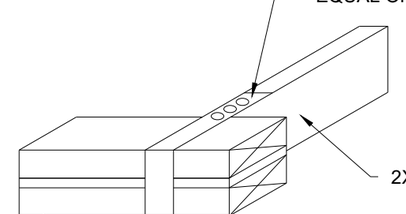

20 GA. STRAP TO WRAP UNDER
DOOR HEADER TO OTHER SIDE
OF CRIPPLE STUD WITH (3)
0.131"Ø X 2-1/4" GUNNAILS OR
EQUAL ON EACH SIDE

2X4 CRIPPLE STUD

(2) - 2X S.P.F. #2 WITH
1/2" PLYWOOD FILLER
SEE DETAIL ON 4/S-14

7 / S-14 **CRIPPLE STUD WITH STRAP DETAIL**
SCALE: N.T.S.

12/30/20

1552 6TH ST., WINTER HAVEN, FL 33880
(863)865-6502

THESE PLANS WERE DESIGNED IN ACCORDANCE WITH THE 2020 FLORIDA BUILDING CODE (7TH ED.).

DETAILS	
DATE: 12/08/20	DRAWN BY: RD
SCALE: AS NOTED	CHECKED BY: KMB

SHEET:
S-14
SHEET 15 OF 15